REVISIONS		DWG. NO. 2–6A–MFA–XX	SHEET 1	REV A
REV	DESCRIPTION	DATE	APPROVED	
A	RELEASED TO PRODUCTION	3–30–06	DMD	

SPECIFICATIONS:
NOMINAL IMPEDANCE: 50 OHMS
FREQUENCY RANGE: DC TO 6GHz
AVERAGE POWER RATING: 2 WATTS AT 25°C.
(DERATED LINEARLY TO 10% AT +125°C)
PEAK POWER: 500 WATTS MAX.
(5uSec PULSE, 0.10% DUTY CYCLE)
VSWR AND ATTENUATION ACCURACY: SEE TABLE
OPERATING TEMPERATURE: –65°C TO +125°C.
CONNECTOR: SMA MALE/FEMALE
MATERIALS:
COUPLING NUT: PASSIVATED STAINLESS STEEL
BODY: PASSIVATED STAINLESS STEEL
CONTACTS: BERYLLIUM COPPER, GOLD PLATED OVER NICKEL
RESISTIVE ELEMENT: THIN FILM ALUMINA (NO BeO)

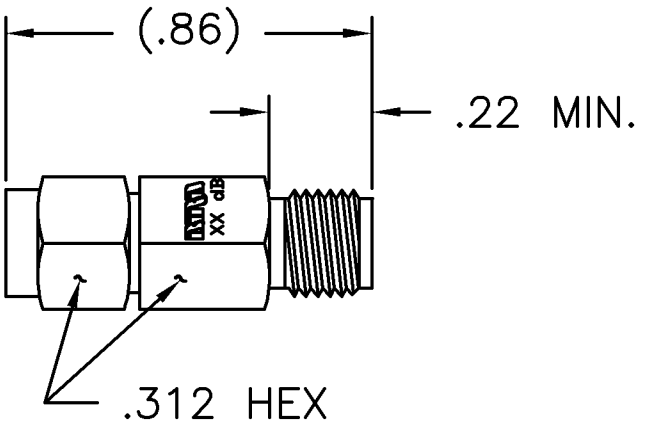

ELECTRICAL CHARACTERISTICS
XX = DASH NUMBER (dB VALUE)

DASH NO.	dB VALUE	ATTENUATION ACCURACY DC – 6GHz	VSWR MAX. DC–2.5 GHz	VSWR MAX. 2.5–6 GHz
–15 THRU –30	15 THRU 30	±0.75 dB	1.15	1.30
–07 THRU –12	7 THRU 12	±0.5 dB	1.15	1.25
–01 THRU –06	1 THRU 6	±0.5 dB	1.15	1.20

UNLESS OTHERWISE SPECIFIED DIMENSIONS ARE IN INCHES
TOLERANCES ARE:
FRACTIONS ±1/64 DECIMALS .XX= ±.010 .XXX= ±.005
ANGLES ±30' MILLIMETERS .X= ±.4 .XX= ±.12
DO NOT SCALE DRAWING

THIS DRAWING IS THE PROPERTY OF THE BIRD TECHNOLOGIES GROUP OR BIRD ELECTRONIC CORPORATION. THE DESIGNS AND SPECIFICATIONS DISCLOSED HEREON ARE PROPRIETARY AND SHALL NOT BE REPRODUCED, NOR COPIED, NOR USED AS THE BASIS FOR THE MANUFACTURE OR SALE OF APPARATUS OR DEVICES WITHOUT THEIR EXPRESS WRITTEN CONSENT.

APPROVALS		DATE
DRN	DMD	3–30–06
CHK	DMD	3–30–06
APP	DMD	3–30–06

MATERIAL CODE
SEE SPECIFICATIONS
FINISH CODE

BIRD TECHNOLOGIES GROUP ELECTRONIC CORPORATION

TITLE ATTENUATOR, BROADBAND PRECISION
6 GHz SMA MALE/FEMALE, 2W

A	FSCM NO. 70998	SCALE NONE	DWG. NO. 2–6A–MFA–XX	REV A
PROJ./LIB AUTOCAD		COMM CODE AT1	SHEET 1 OF 1	